POWER

RESISTOR

REMARKS	PARTS NAME
NO MARK	CARBON FILM RESISTOR (P=5)
⊘	CARBON FILM RESISTOR (P=10)
△	METAL OXIDE FILM RESISTOR
⚠	METAL FILM RESISTOR
⊠	METAL PLATE RESISTOR
◪	FIRE PROOF CARBON FILM RESISTOR
□	CEMENT MOLDED RESISTOR
⊘	SEMI VARIABLE RESISTOR
■	CHIP RESISTOR

CAPACITOR

REMARKS	PARTS NAME	
NO MARK	ELECTROLYTIC CAPACITOR	‖
⊗	TANTALUM CAPACITOR	
NO MARK	CERAMIC CAPACITOR	‖
⦿	CERAMIC TUBULAR CAPACITOR	
◎	POLYESTER FILM CAPACITOR	
○	POLYSTYRENE FILM CAPACITOR	
ⓘ	MICA CAPACITOR	
ⓟ	POLYPROPYLENE FILM CAPACITOR	
◉	SEMICONDUCTIVE CERAMIC CAPACITOR	
ⓢ	POLYPHENYLENE SULFIDE FILM CAPACITOR	

NOTICE (model)
(J)····· JAPAN
(U)····· U.S.A
(C)····· CANADA
(R)····· GENERAL
(T)····· CHINA
(K)····· KOREA
(A)····· AUSTRALIA
(B)····· BRITISH
(G)····· EUROPE
(L)····· SINGAPORE
(E)····· SOUTH EUROPE
(V)····· TAIWAN
(F)····· RUSSIAN
(P)····· LATIN AMERICA
(S)····· BRAZIL
(H)····· THAI

Destination Part List

SXX	LOC	J	UC	R	TKABGLF
s202	F2002	WU53640 T10AH250V	WG21120 10A125V	WG21120 10A125V	WB76060 T6.3AL250V
s213	R2005 R2005	RD15847 470K	RD15847 470K	RD15847 470K	RD15910 1M
s214	C2016	WU89870 390/200	WU89870 390/200	WU46420 390/400	WU89880 100/400
s215	R2025	WU98540 3R0.27	WU98540 3R0.27	WU98540 3R0.27	WD52610 3R0.33
s218	C2007	VE15040 0.068/250	WR97740 0.022/250	WR97740 0.022/250	WR97740 0.022/250
s220	C2037 C2023	X	US06322 2200P(B)	US06322 2200P(B)	US06322 2200P(B)
s221	R2533 R2534	VR07260 1P33K	VR07260 1P33K	VR07260 1P33K	VR07300 1P100K
s222	C2019	WH03590 1000P/250	WH03590 1000P/250	WH03610 2200P/250	WH03610 2200P/250
s226	R2545	RD35722 22K	RD35722 22K	RD35718 18K	RD35712 12K

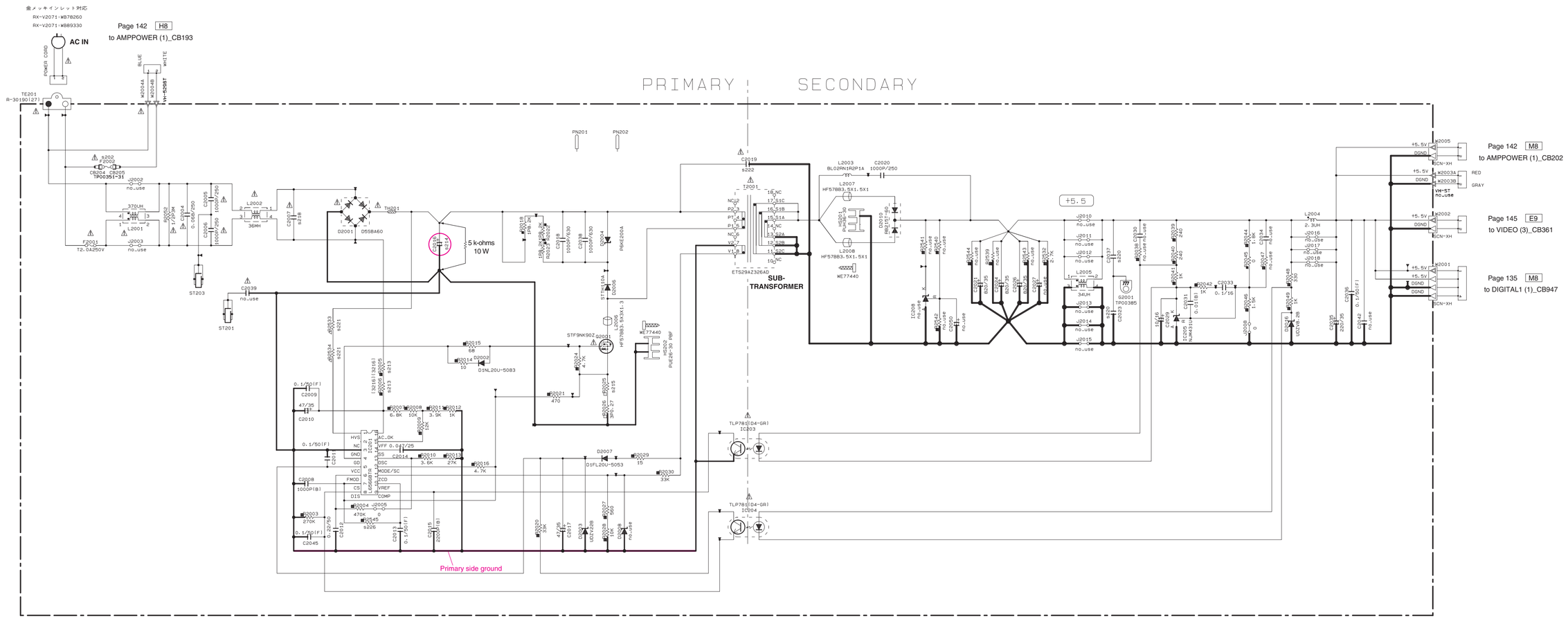

IC201: L6566BTR
Multi mode controller for SMPS

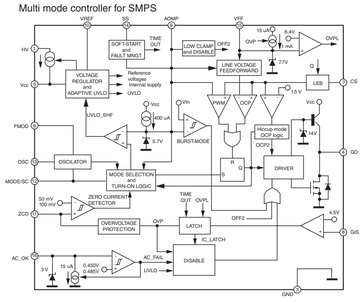

IC205: NJM431U
Adjustable precision shunt regulator

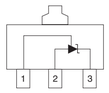

Notes)

Safety measures

- Some internal parts in this product contain high voltages and are dangerous. Be sure to take safety measures during servicing, such as wearing insulating gloves.
- Note that the capacitors indicated below are dangerous even after the power is turned off because an electric charge remains and a high voltage continues to exist there. Before starting any repair work, connect a discharging resistor (5 k-ohms/10 W) to the terminals of each capacitor indicated below to discharge electricity. The time required for discharging is about 30 seconds per each.
  C2016 on POWER P.C.B.

注意)

安全対策

・この製品の内部には高電圧部分があり危険です。修理の際は、絶縁性の手袋を使用するなどの安全対策を行ってください。
・下記のコンデンサには電源を OFF にした後も電荷が残り、高電圧が維持されており危険です。修理作業前に放電用抵抗 (5 kΩ/10 W) を下記の各コンデンサの端子間に接続して放電してください。放電所用時間は各々約 30 秒間です。
POWER P.C.B. の C2016

★ Components having special characteristics are marked ⚠ and must be replaced with parts having specifications equal to those originally installed.
★ Schematic diagram is subject to change without notice.

● ⚠印のある部品は、安全性確保部品を示しています。部品の交換が必要な場合、パーツリストに記載されている部品を使用してください。
● 本回路図は標準回路図です。改良のため予告なく変更することがあります。